Sensor-switched LED floodlight

XLED home 2 XL S

V2 graphite
EAN 4007841 030056
Article number 030056
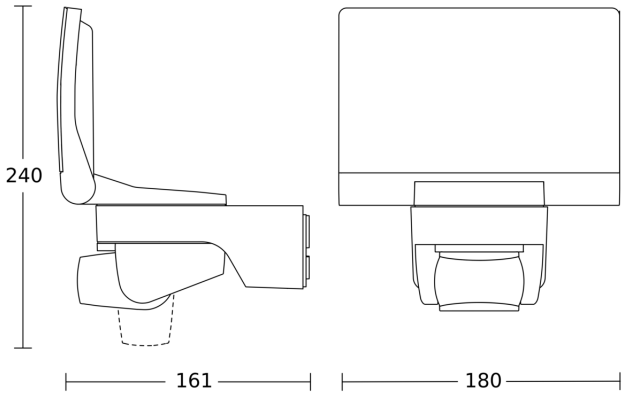
Dimension Drawing